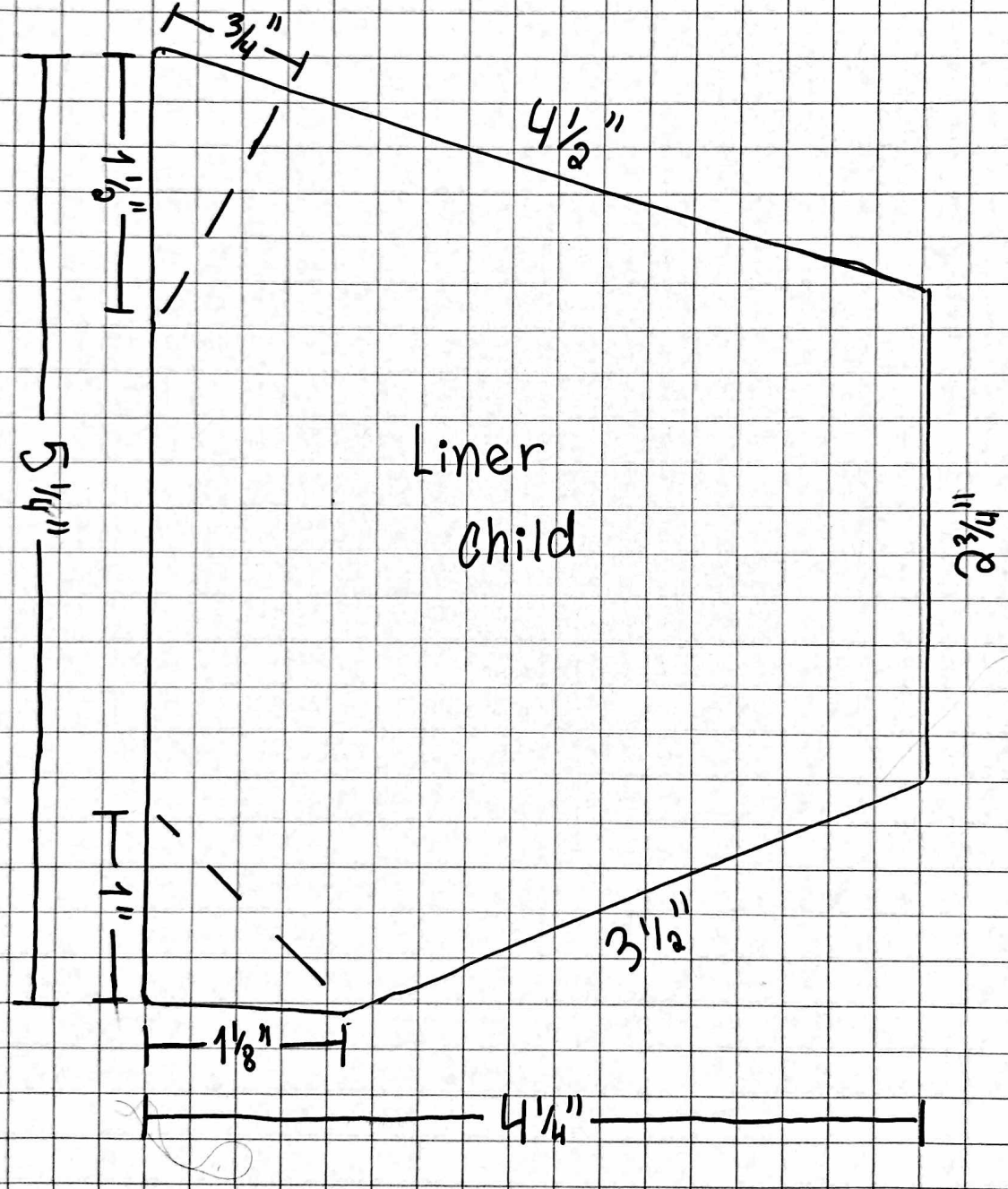

nj

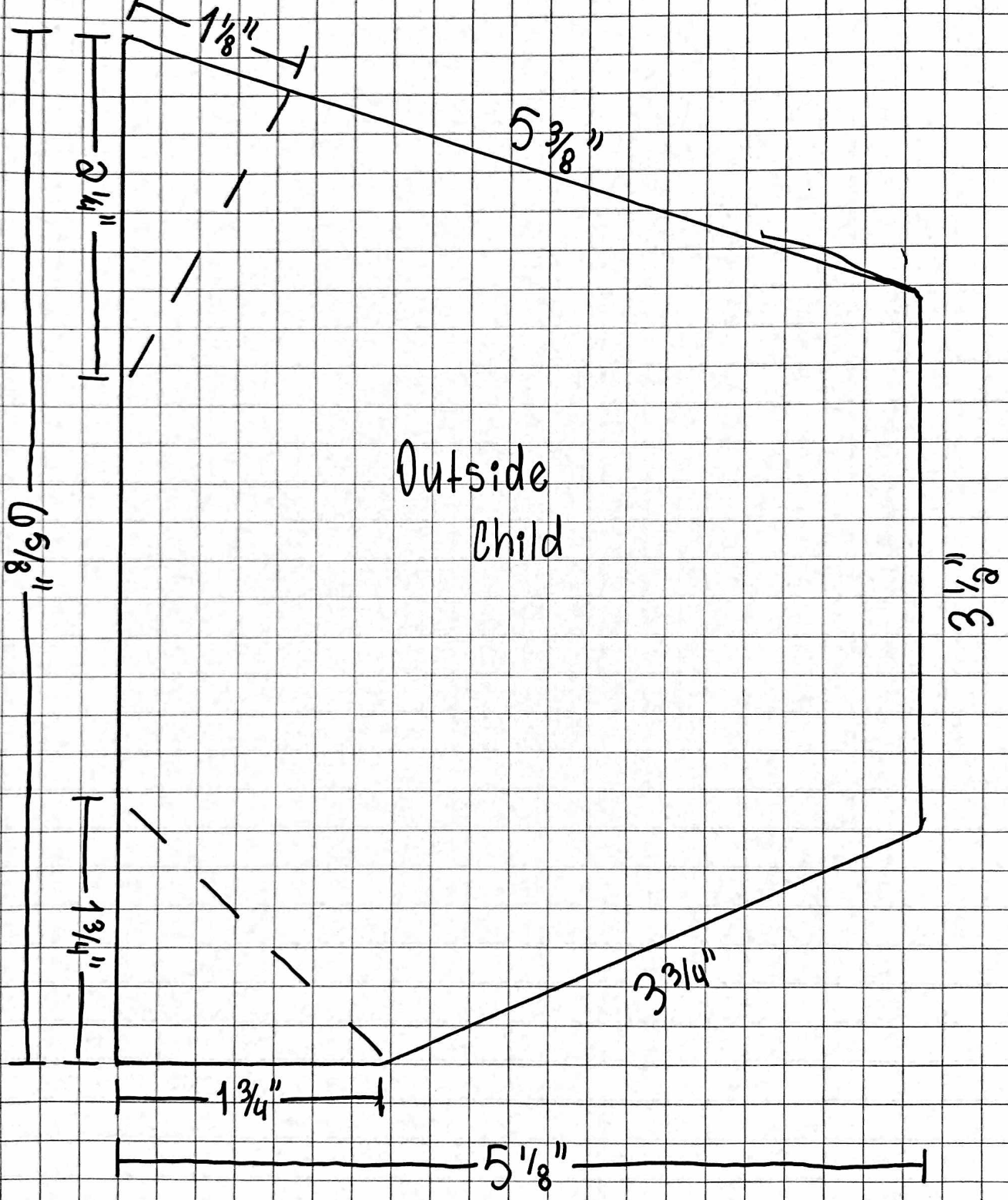

nj

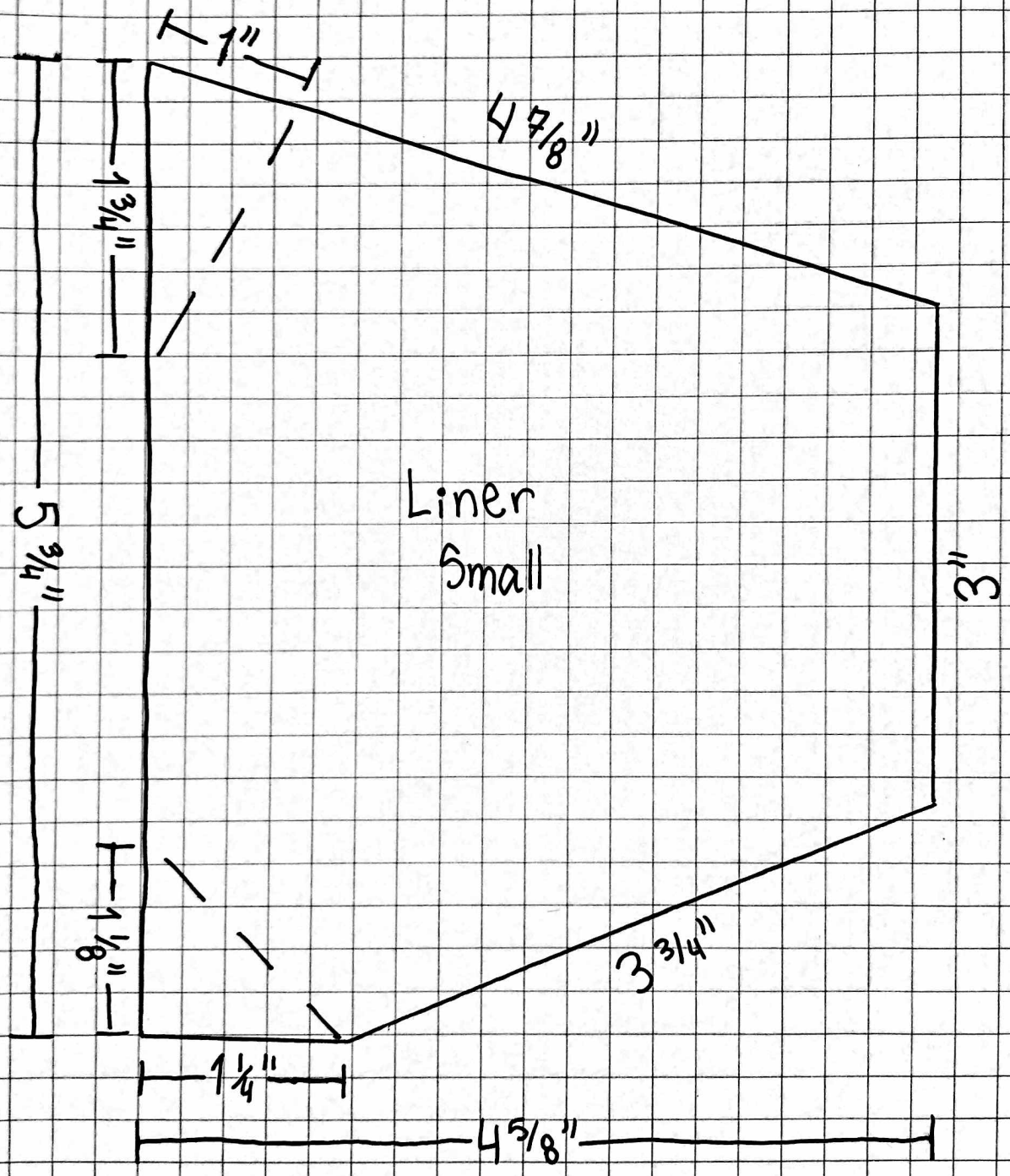
1"
4 7/8"
1 3/4"
5 1/8"
Liner
Small
3"
1 1/8"
3 3/4"
1 1/4"
4 5/8"

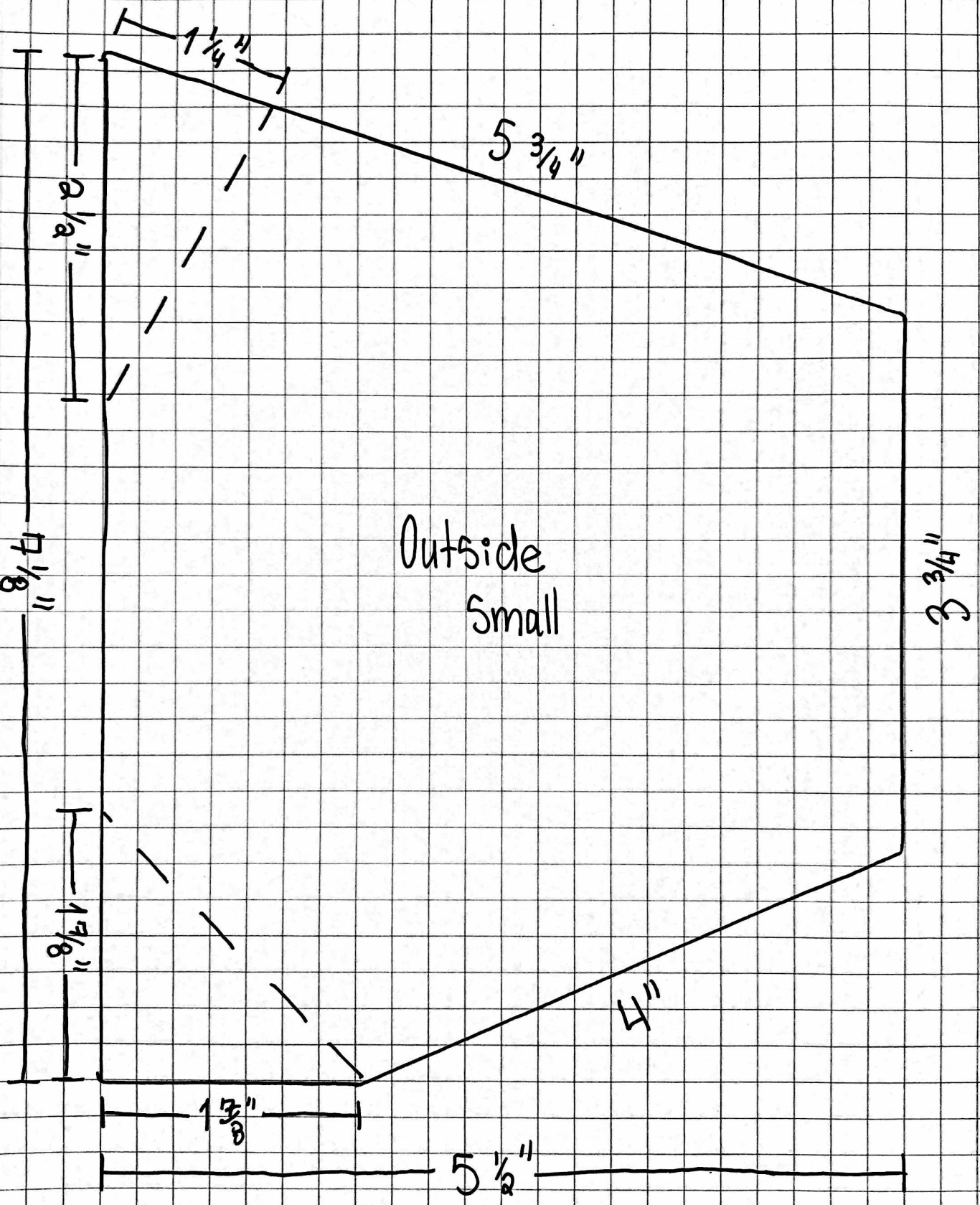

nj

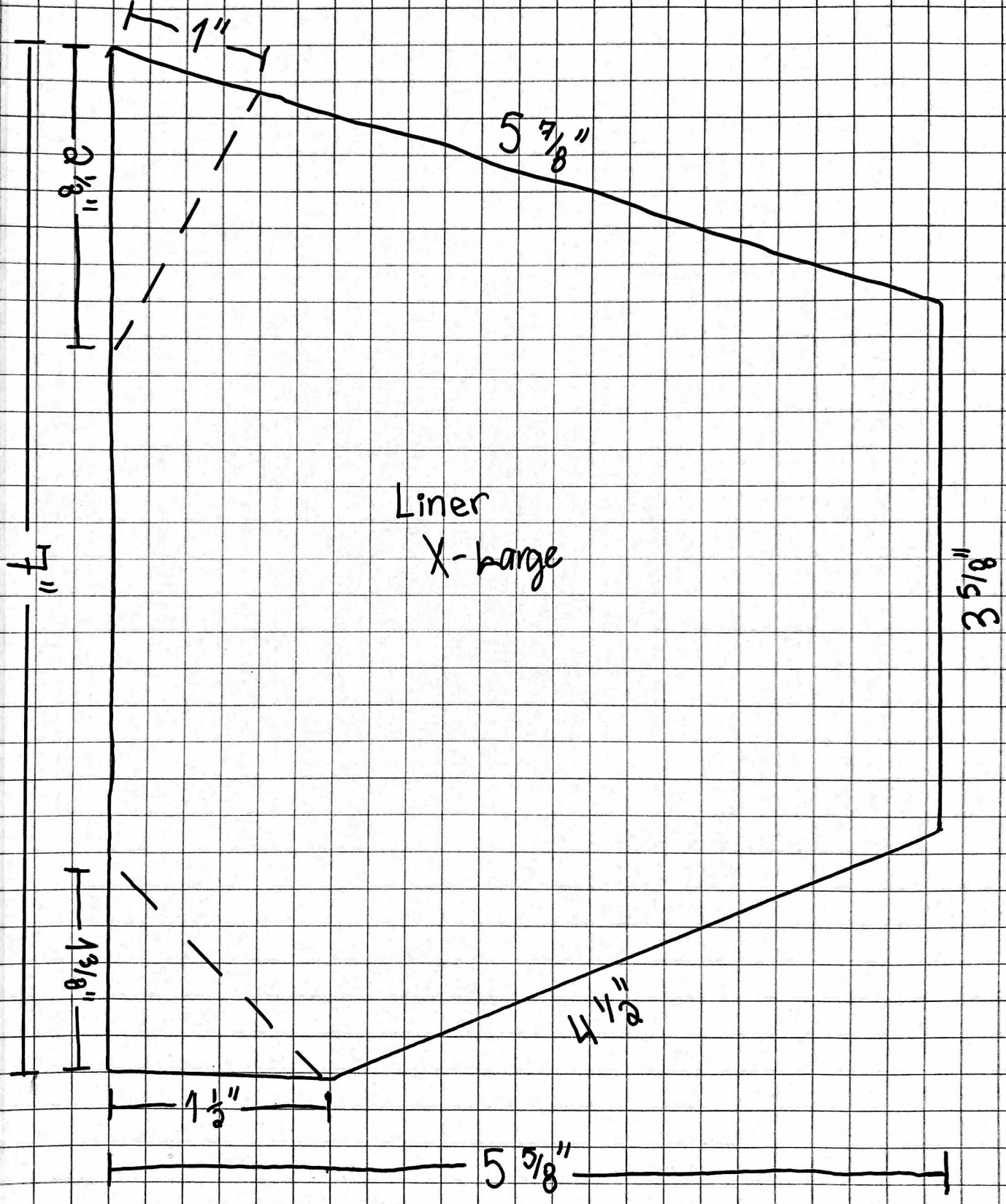
1"
5 7/8"
2 1/8"
Liner
X-large
7"
3 5/8"
1 9/16"
4 1/2"
1 1/2"
5 5/8"

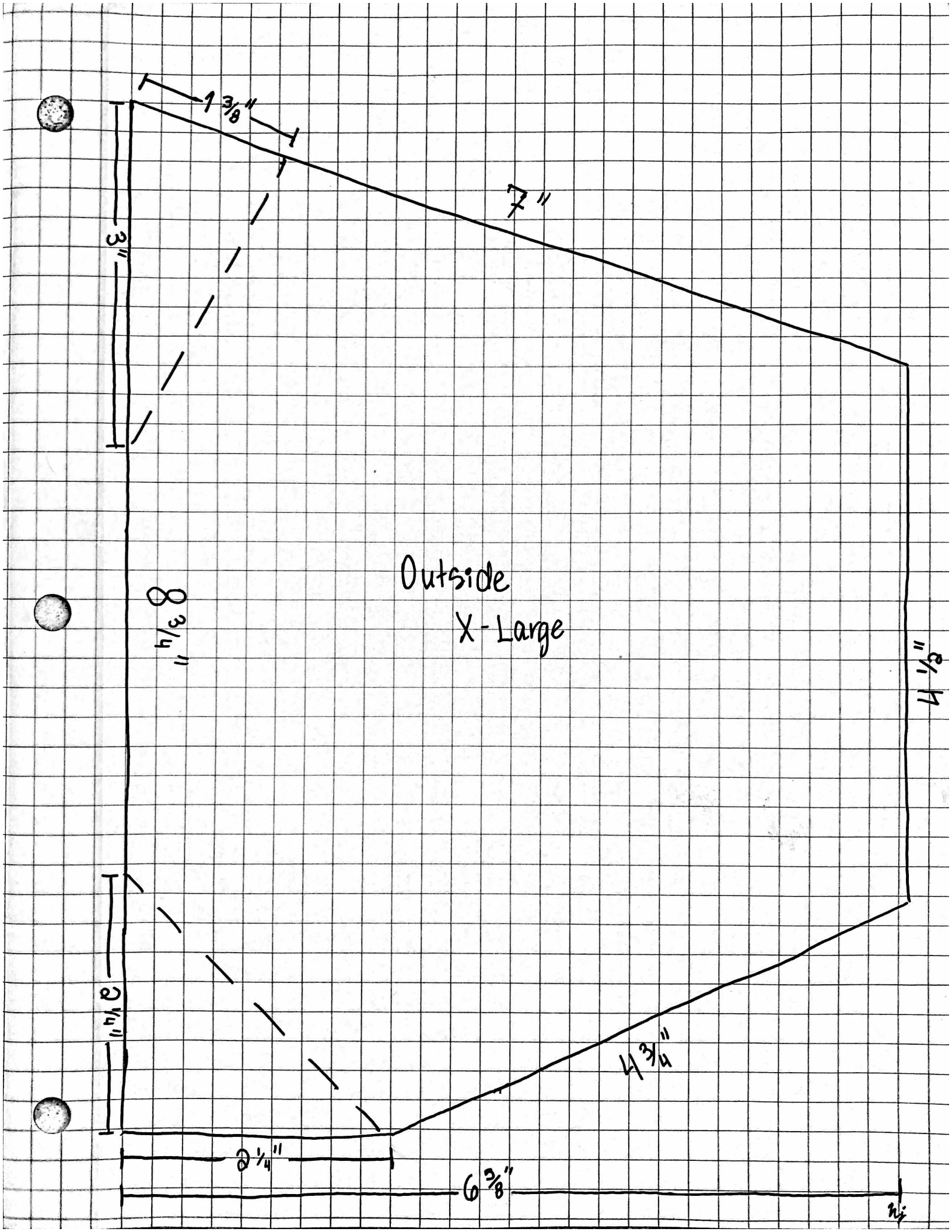
1 3/8"
7"
3"
8 3/4"
Outside
X-Large
4 1/8"
2 1/4"
4 3/4"
2 1/4"
6 3/8"